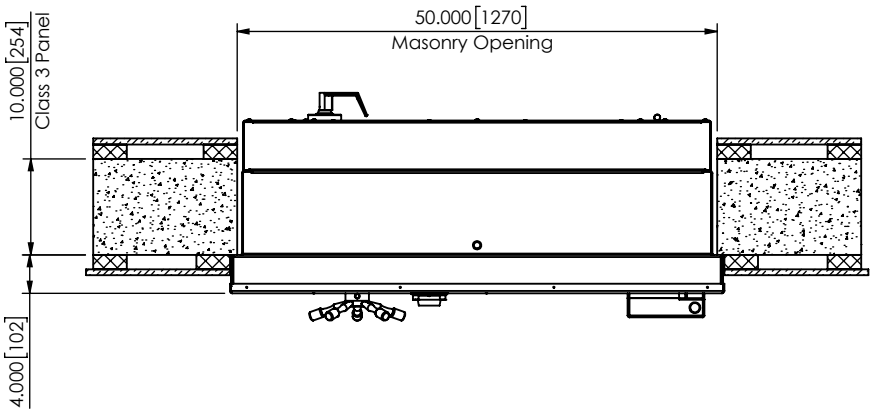

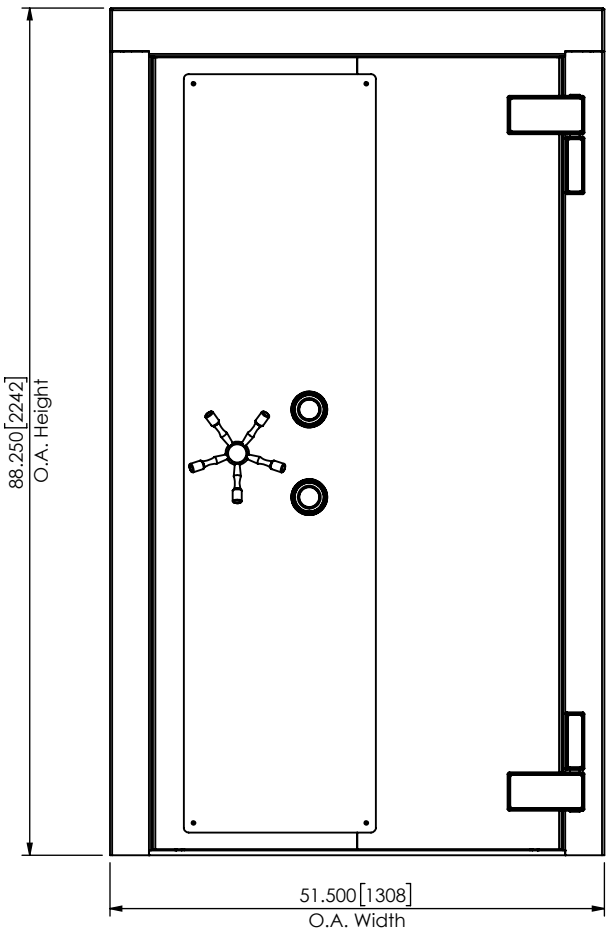

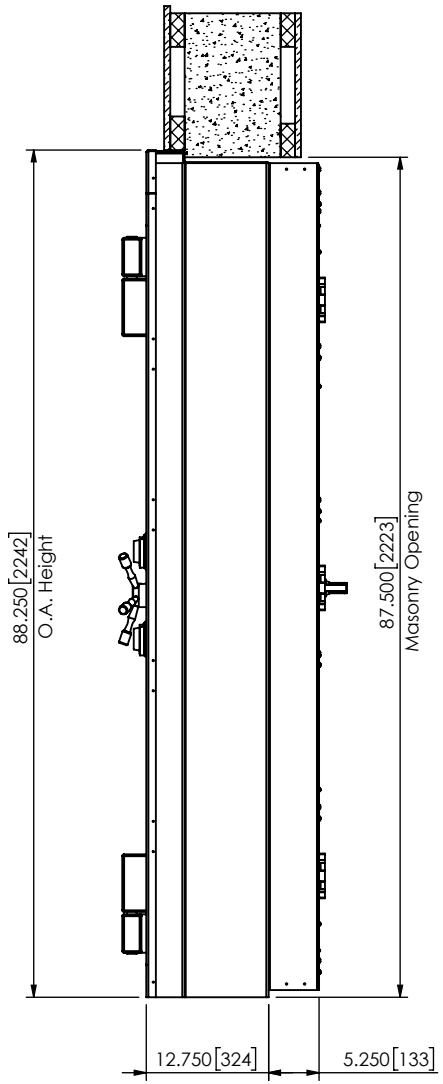

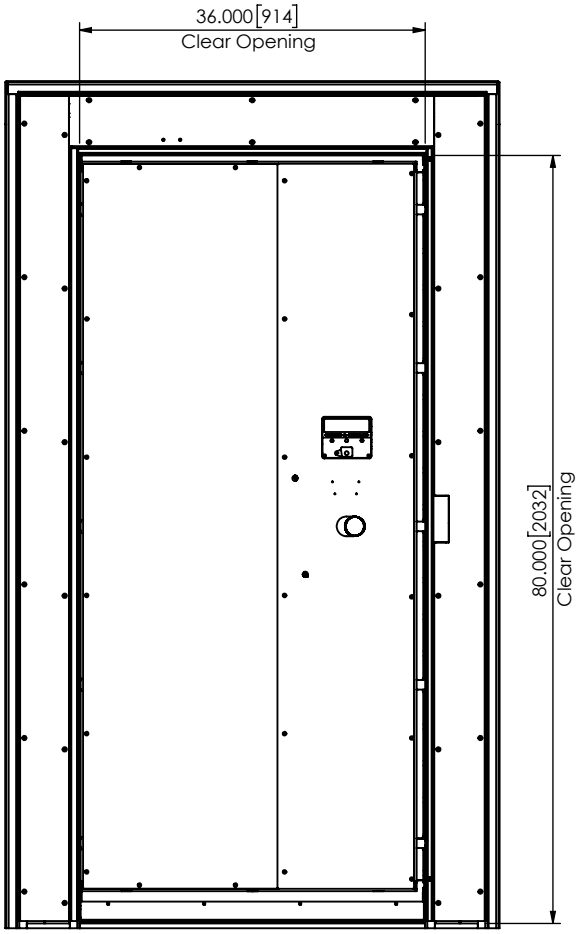

Shown with Daygate Removed

est. 1967

HAMILTON

CUSTOM MADE SECURITY

PROPRIETARY AND CONFIDENTIAL
THESE DRAWINGS ARE THE PROPERTY OF HAMILTON SAFE CO. AND SHALL NOT BE REPRODUCED,COPIED,USED AS THE BASIS FOR MANUFACTURE OR SALE OF APPARATUS WITHOUT PERMISSION

DESCRIPTION
Hyde Park Vault Door, UL Class 3, Right Swing

DRAWING/MODEL NUMBER	DATE
VDUL-3 RS	8/23/2022

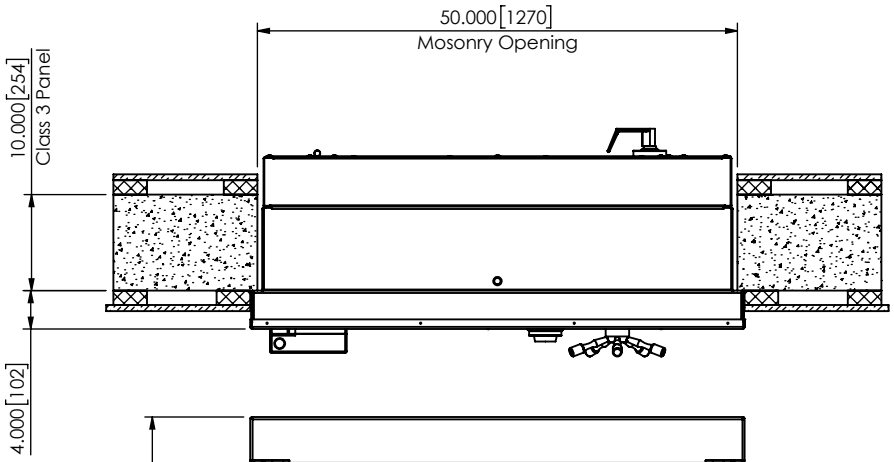

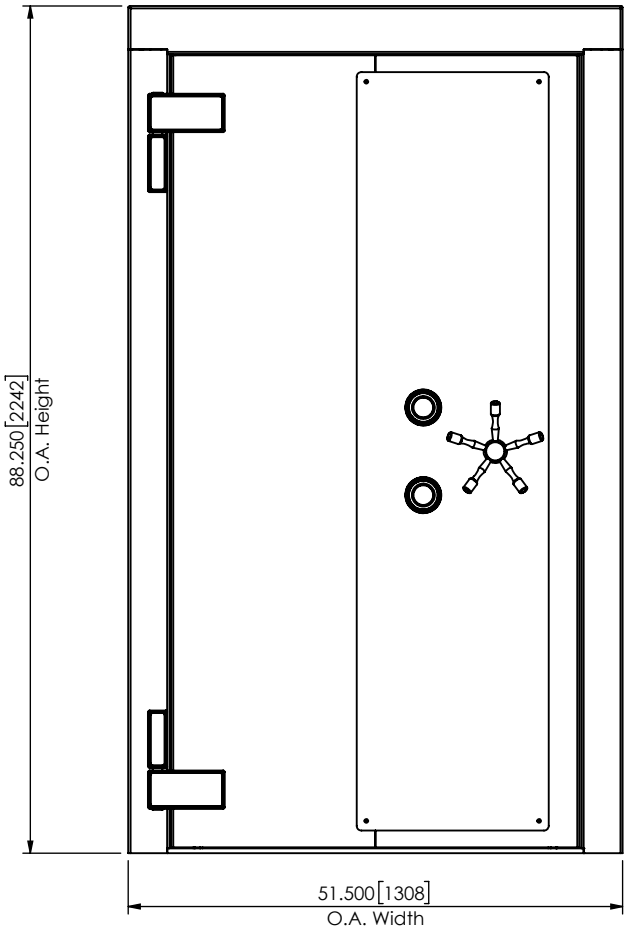

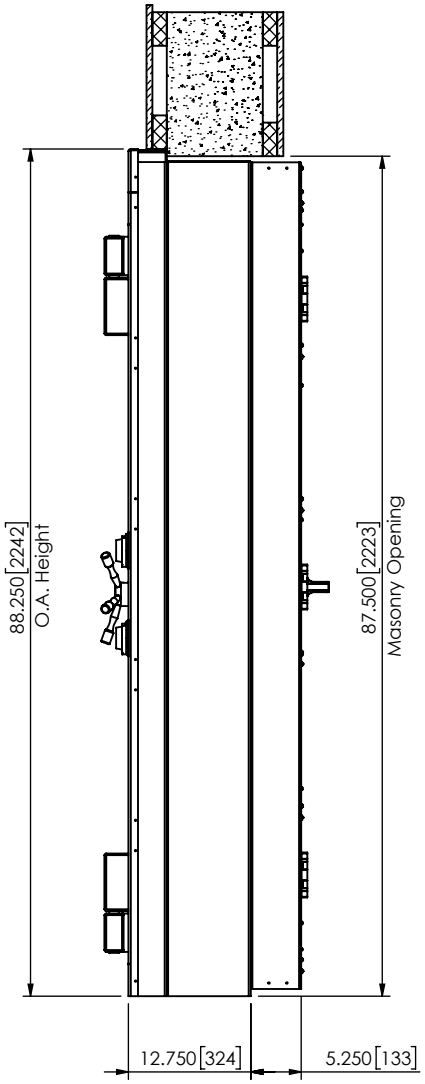

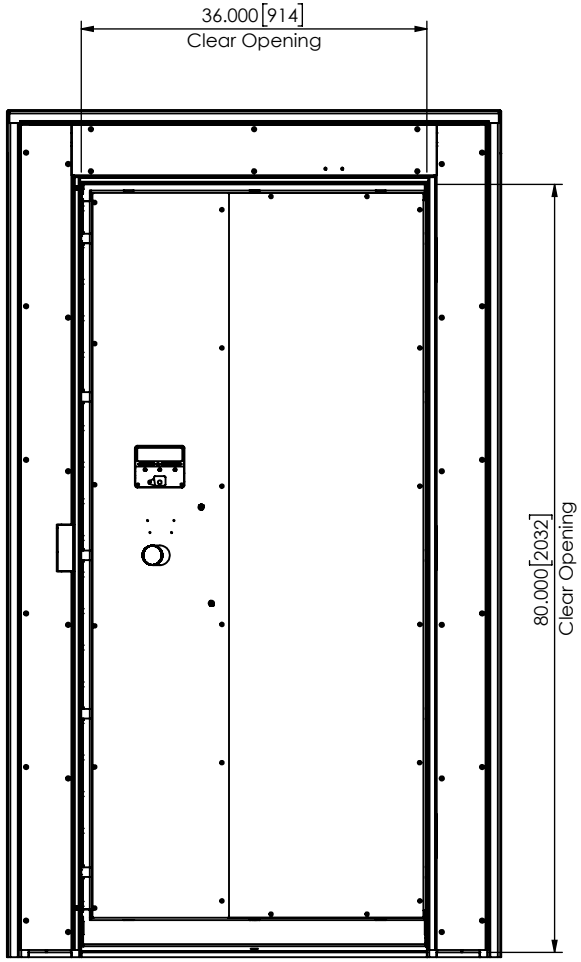

Shown with Daygate Removed

est. 1967

HAMILTON

CUSTOM MADE SECURITY

PROPRIETARY AND CONFIDENTIAL
THESE DRAWINGS ARE THE PROPERTY OF HAMILTON SAFE CO. AND SHALL NOT BE REPRODUCED,COPIED,USED AS THE BASIS FOR MANUFACTURE OR SALE OF APPARATUS WITHOUT PERMISSION

DESCRIPTION		
Hyde Park Vault Door, UL Class 3, Left Swing		
DRAWING/MODEL NUMBER	DATE	
VDUL-3 LS	8/23/2022	

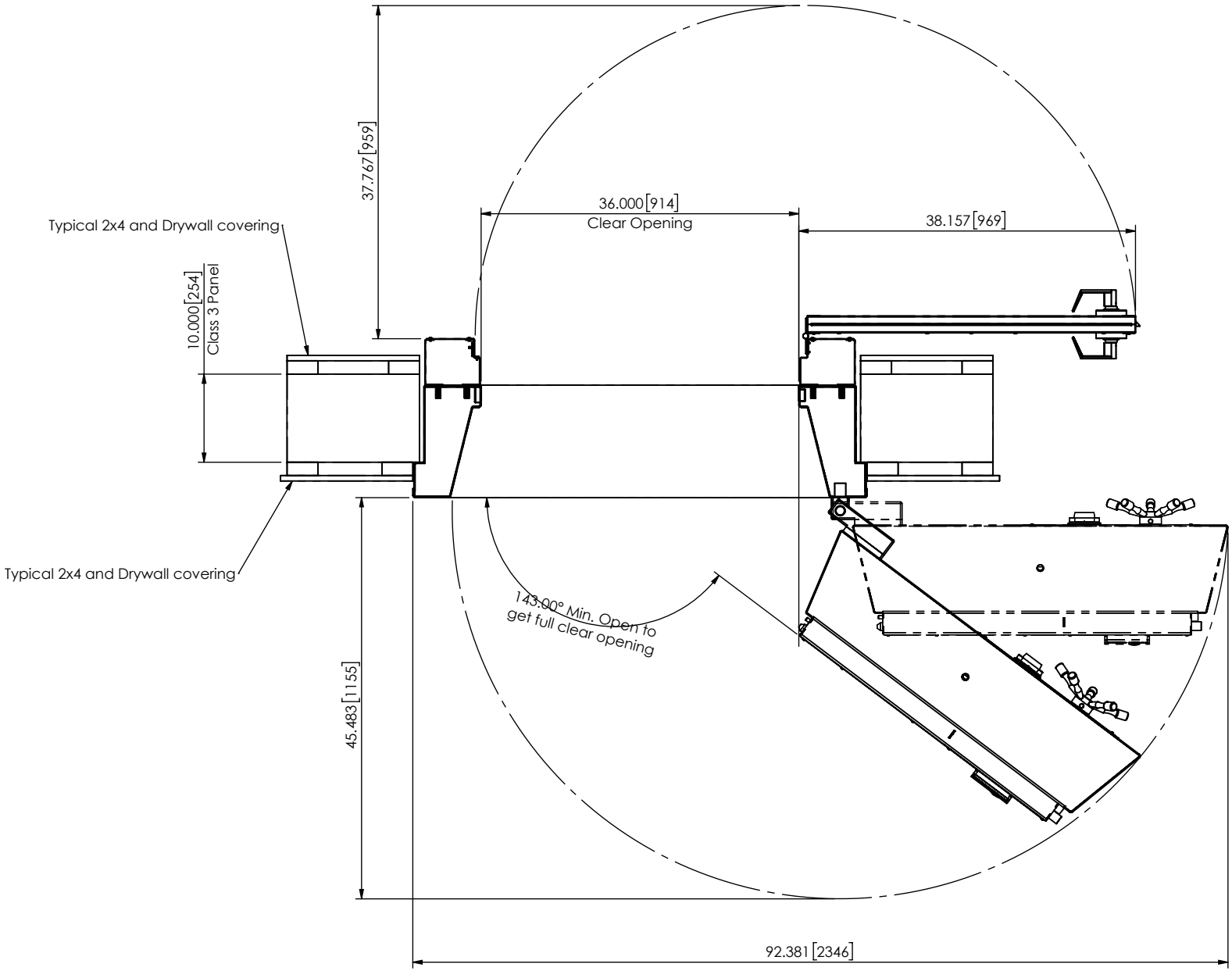

est. 1967

HAMILTON

CUSTOM MADE SECURITY

PROPRIETARY AND CONFIDENTIAL
THESE DRAWINGS ARE THE PROPERTY OF HAMILTON SAFE CO. AND SHALL NOT BE REPRODUCED,COPIED,USED AS THE BASIS FOR MANUFACTURE OR SALE OF APPARATUS WITHOUT PERMISSION

DESCRIPTION	
Hyde Park Vault Door, UL Class 3, Detail	
DRAWING/MODEL NUMBER	DATE
VDUL-3 Detail	8/23/2022

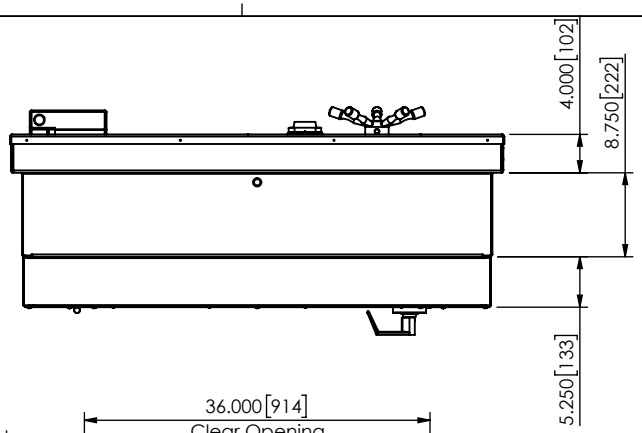

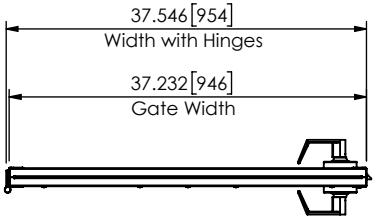

Notes:
Standard daygate paint color
Gate can be installed either swing

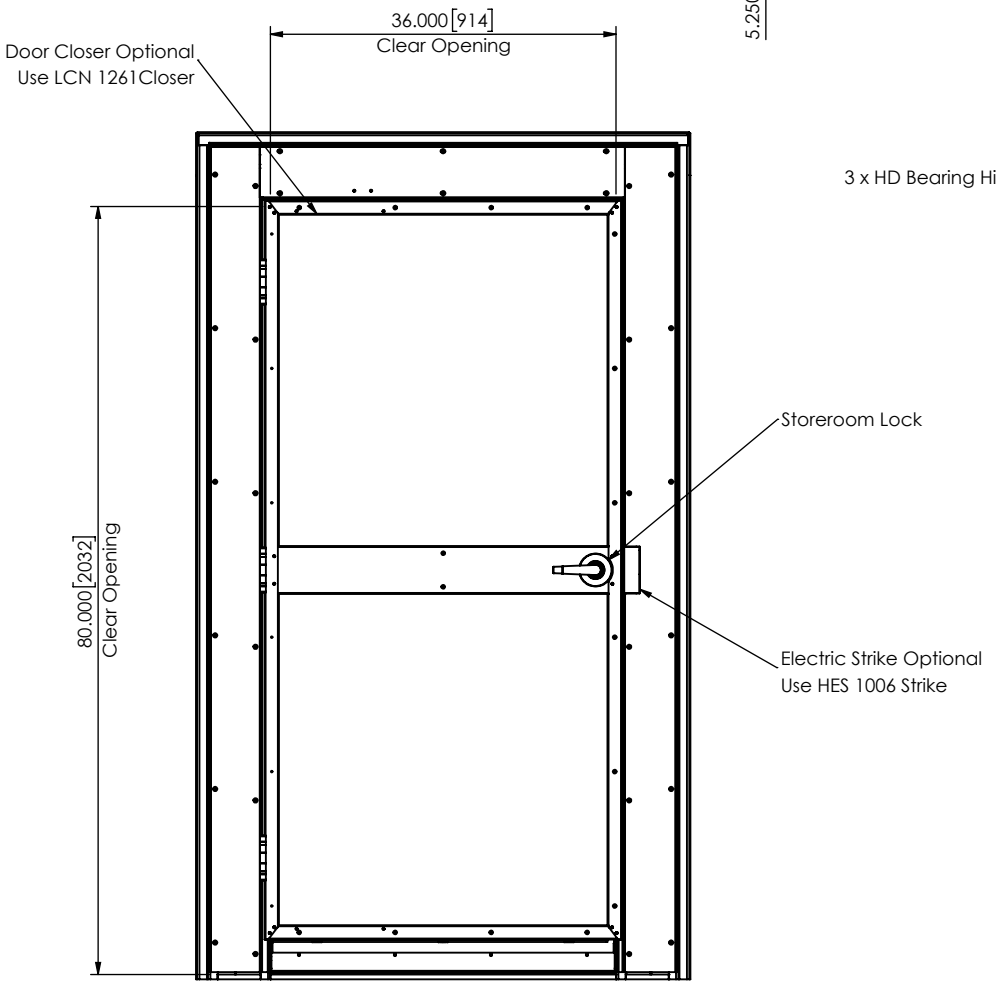

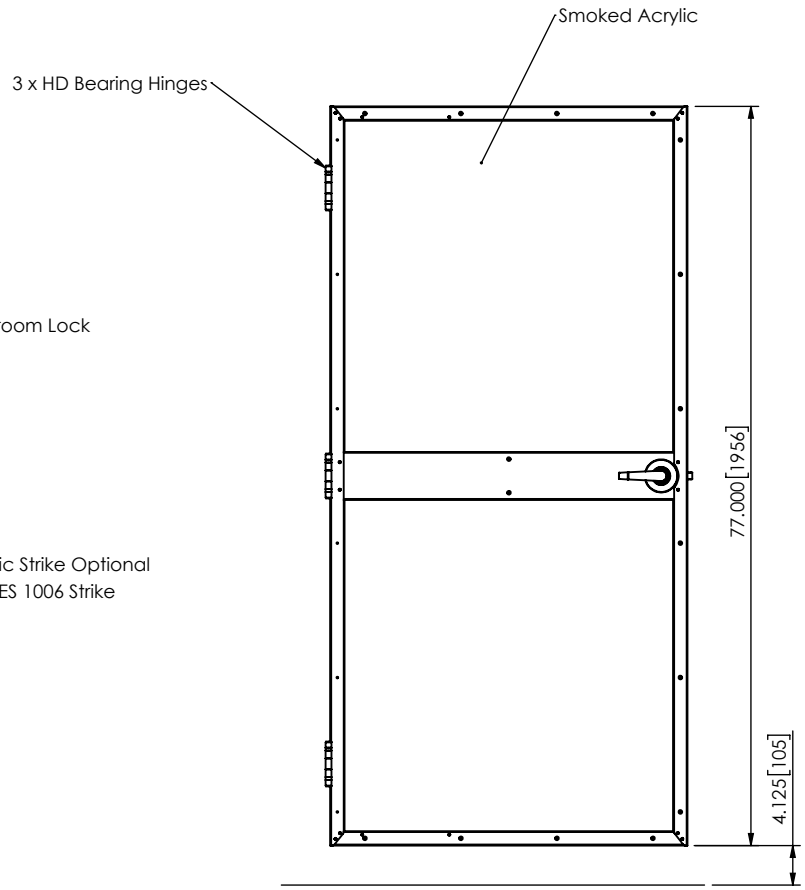

est. 1967
HAMILTON
CUSTOM MADE SECURITY

PROPRIETARY AND CONFIDENTIAL
THESE DRAWINGS ARE THE PROPERTY OF HAMILTON SAFE CO. AND SHALL NOT BE REPRODUCED,COPIED,USED AS THE BASIS FOR MANUFACTURE OR SALE OF APPARATUS WITHOUT PERMISSION

DESCRIPTION	
Acrylic Daygate, Hyde Park Vault Door	
DRAWING/MODEL NUMBER	DATE
VDUL-STDDG	8/23/2022