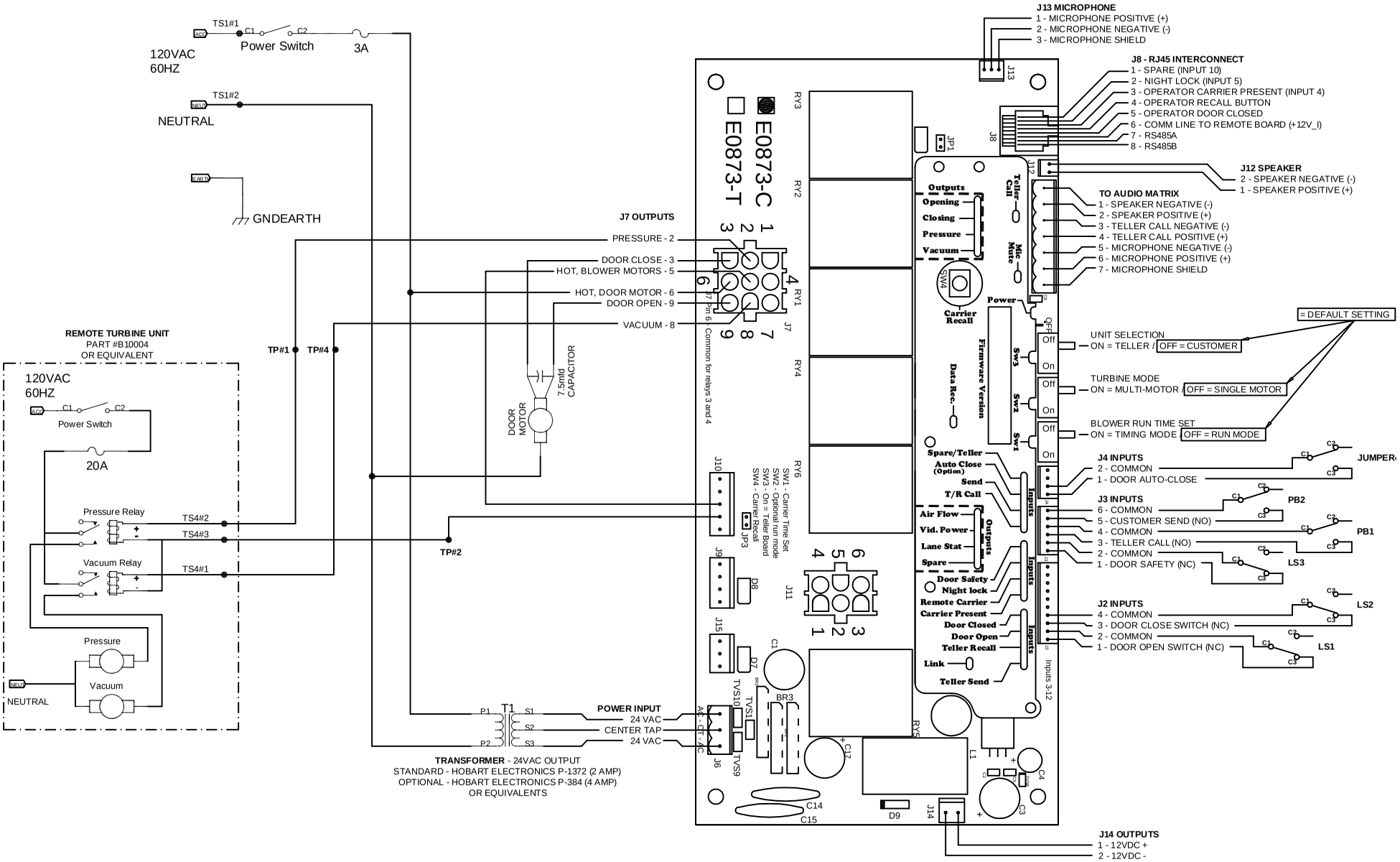

SWITCHES

LS1 - DOOR OPEN LIMIT SWITCH
LS2 - DOOR CLOSED LIMIT SWITCH
LS3 - DOOR SAFETY LIMIT SWITCH
PB1 - CALL FOR SERVICE PUSHBUTTON
PB2 - SEND CARRIER PUSHBUTTON
JUMPER4 - AUTO-CLOSE DOOR (OPTION)
JP3 - JUMPER 3: **DOOR MOTOR AUXILARY THERMAL PROTECTION JUMPER.**
JUMPER "ON" FOR NORMAL OPERATION IN ALL UNITS EXCEPT HA33.
JUMPER "OFF" ONLY IF THE DOOR MOTOR HAS AUXILIARY
CONNECTIONS FOR THERMAL PROTECTION (HA33 ONLY).

THESE DRAWINGS ARE THE PROPERTY OF HAMILTON SAFE CO. AND SHALL NOT BE REPRODUCED OR COPIED OR USED AS THE BASIS FOR MANUFACTURE OR SALE OF APPARATUS WITHOUT PERMISSION

HAMILTON AIR®

PNEUMATIC TUBE SYSTEMS
MODEL HA1000-XLR
ELECTRICAL DIAGRAM

DATE:	DRAWING NUMBER:	REVISION
11/26/2014	99-1144	--