Rev - 1	5/30/12 UPDATE 2" COMP
Rev - 2	

PORTABLE VAULT WITH INTERIOR

DRAWING NUMBER: 95-964
COMPOSITE CHEST - 72"H x 38"W x 32 1/4"D; TL-30
RIGHT SWING
LOCK: KLD. COMBINATION LOCK ON
(OUTER CHEST DOOR)

2-HOUR 350 DEGREE FIRE PROTECTION IN
ACCORDANCE TO UL 72

ALARM:
1 = HEAT SENSOR AND DOOR CONTACT
1 = ALARM HOLE

COLOR:
CHARCOAL GRAY

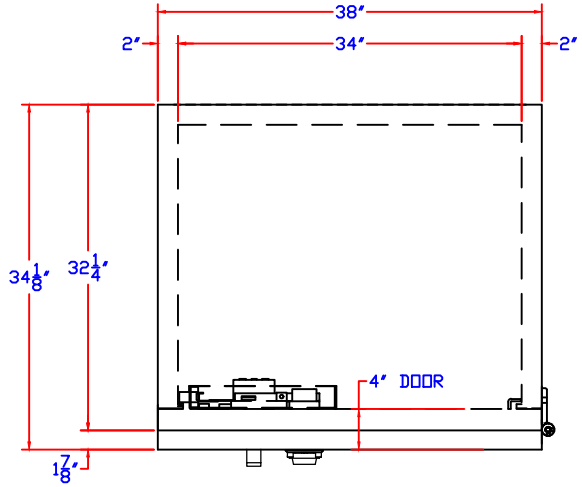

PLAN VIEW

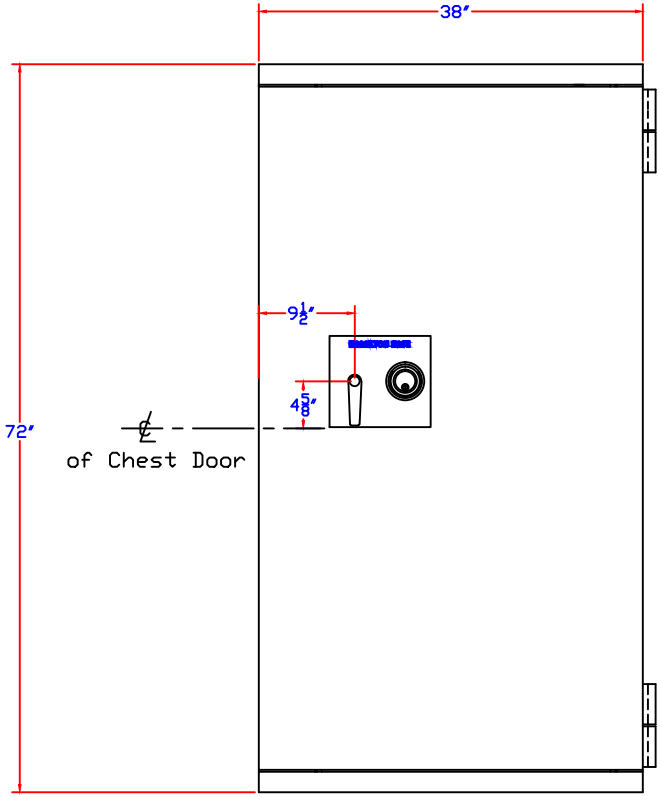

FRONT ELEVATION

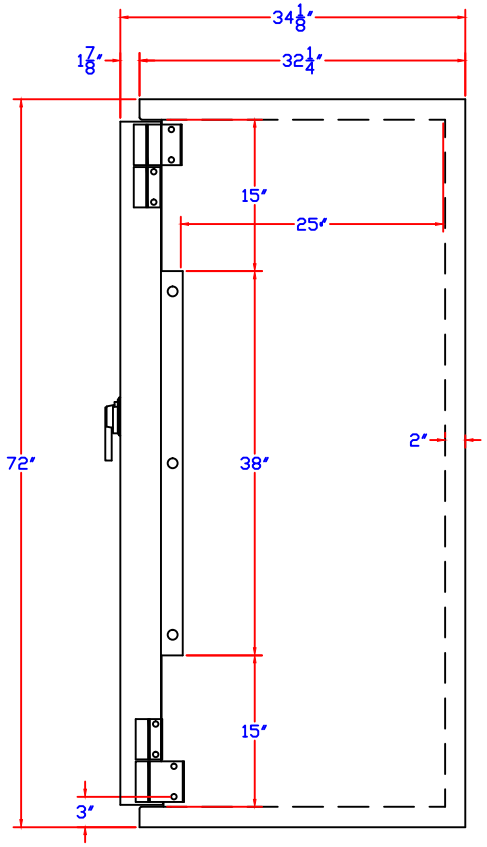

RIGHT SIDE ELEVATION

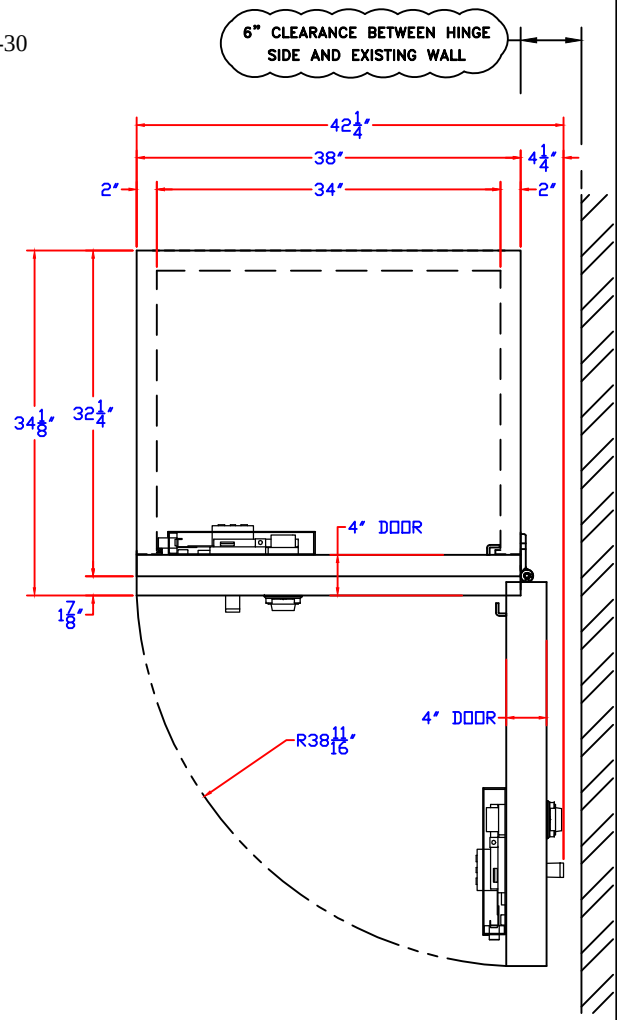

PLAN VIEW WITH DOOR OPEN AT 90°

HAMILTON SAFE

TL-30 COMPOSITE CHEST
72"H x 38"W x 32 1/4"D
RIGHT SWING - U.L. LISTED

Drawing Number : 95-964	Date : 12-13-04